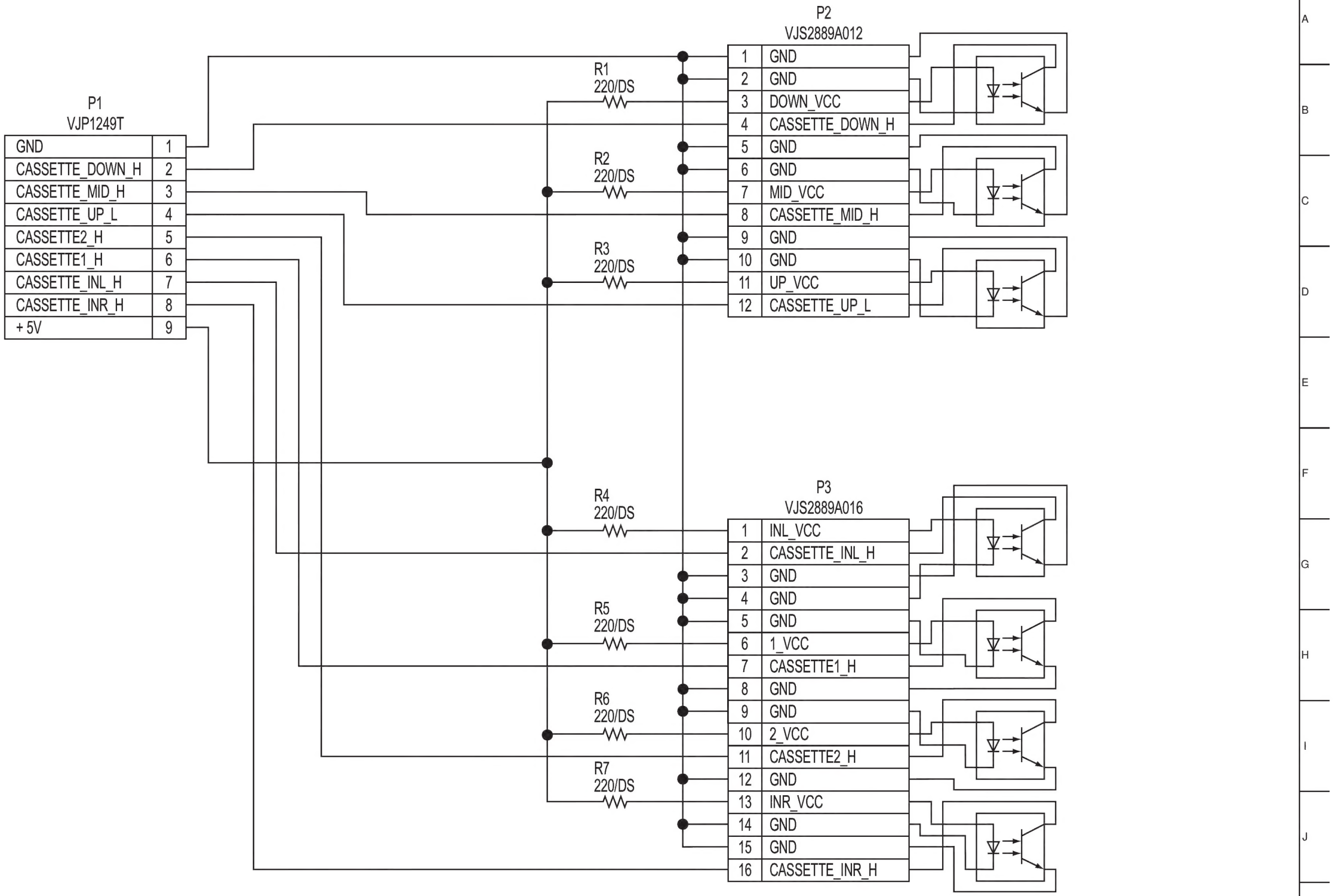

COMPONENT NAME	CARRIGE	01/01
CIRCUIT BOARD NO.	COMPONENT PATH	
VEP80856A		
		SCM178